WM Series
WM 24W-…-OF (Openframe)
60,5 cm (23,8") 16:9 LCD

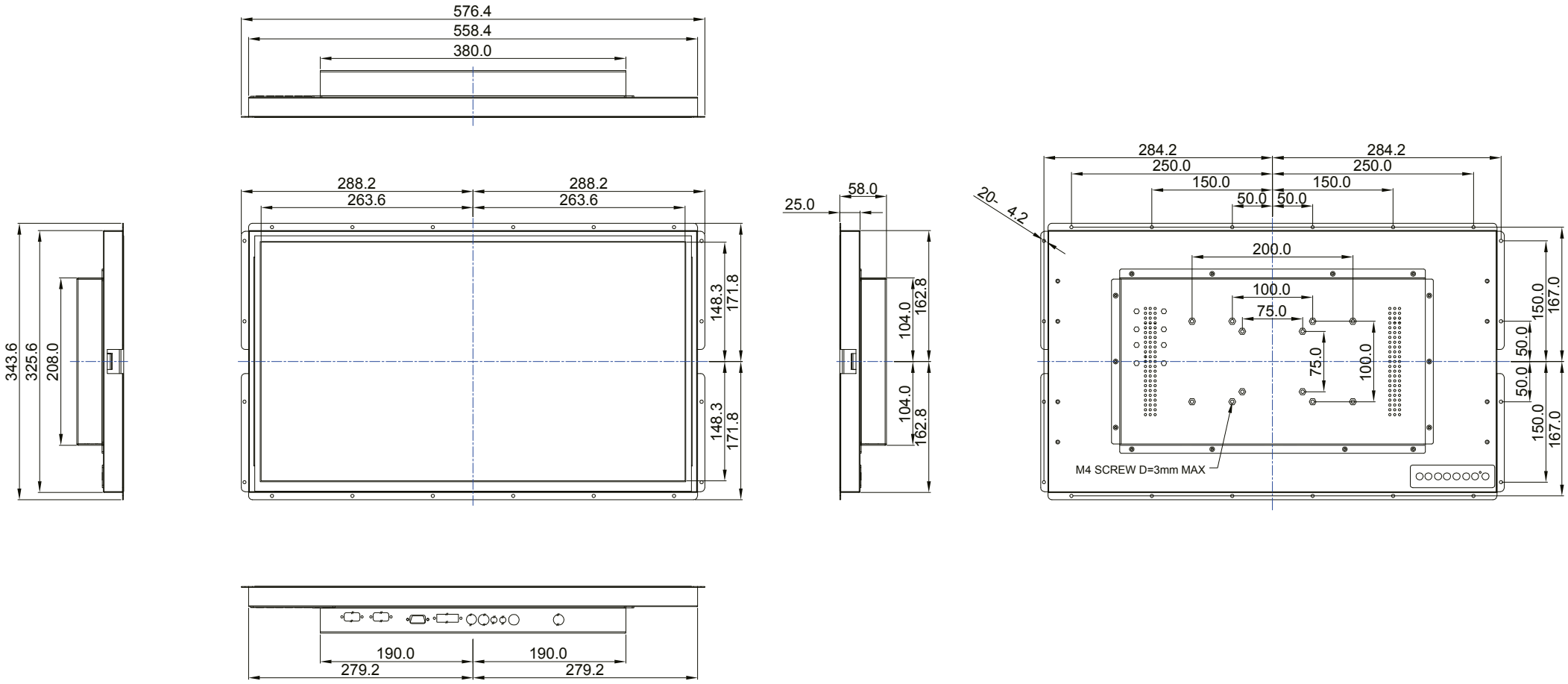

Unit: mm, not to scale. Errors and changes excepted. Version 161014